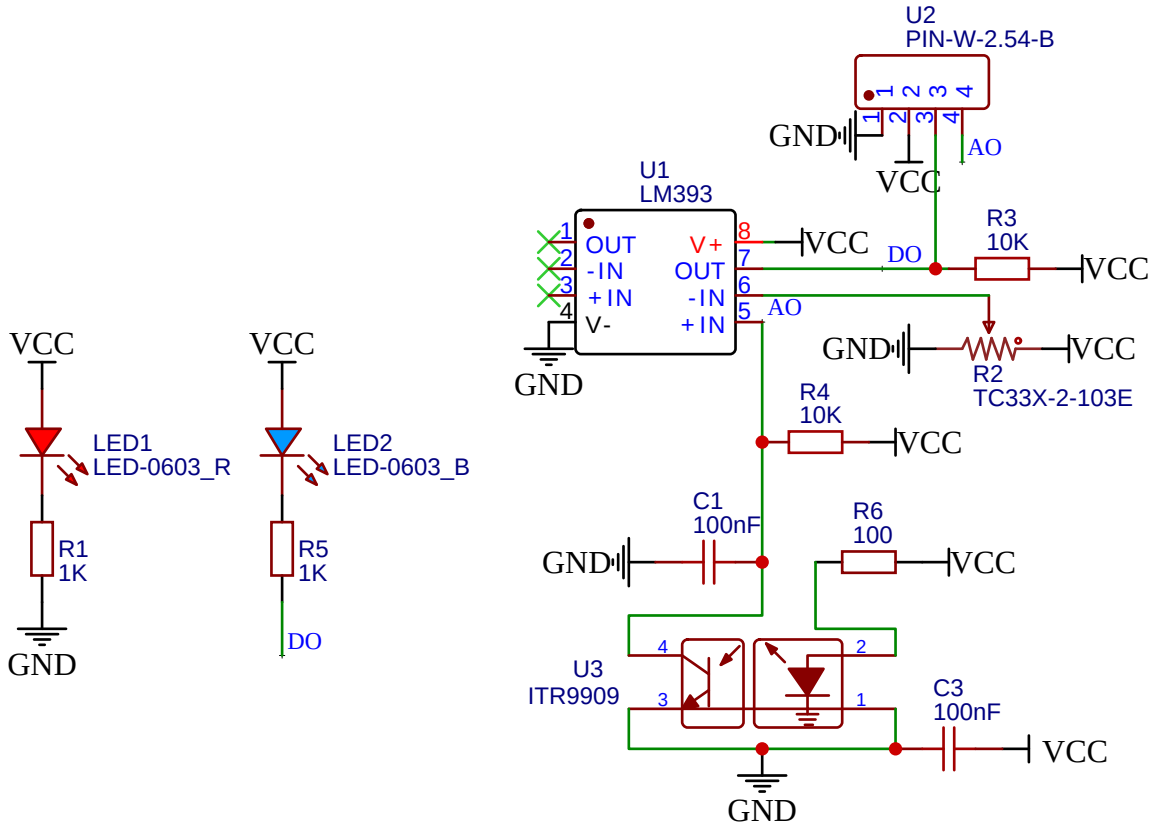

TITLE: 红外探测传感器 HS-S01B		REV: 1.0
	Company:	Sheet: 1/1
	Date: 2023-07-14 Drawn By:	