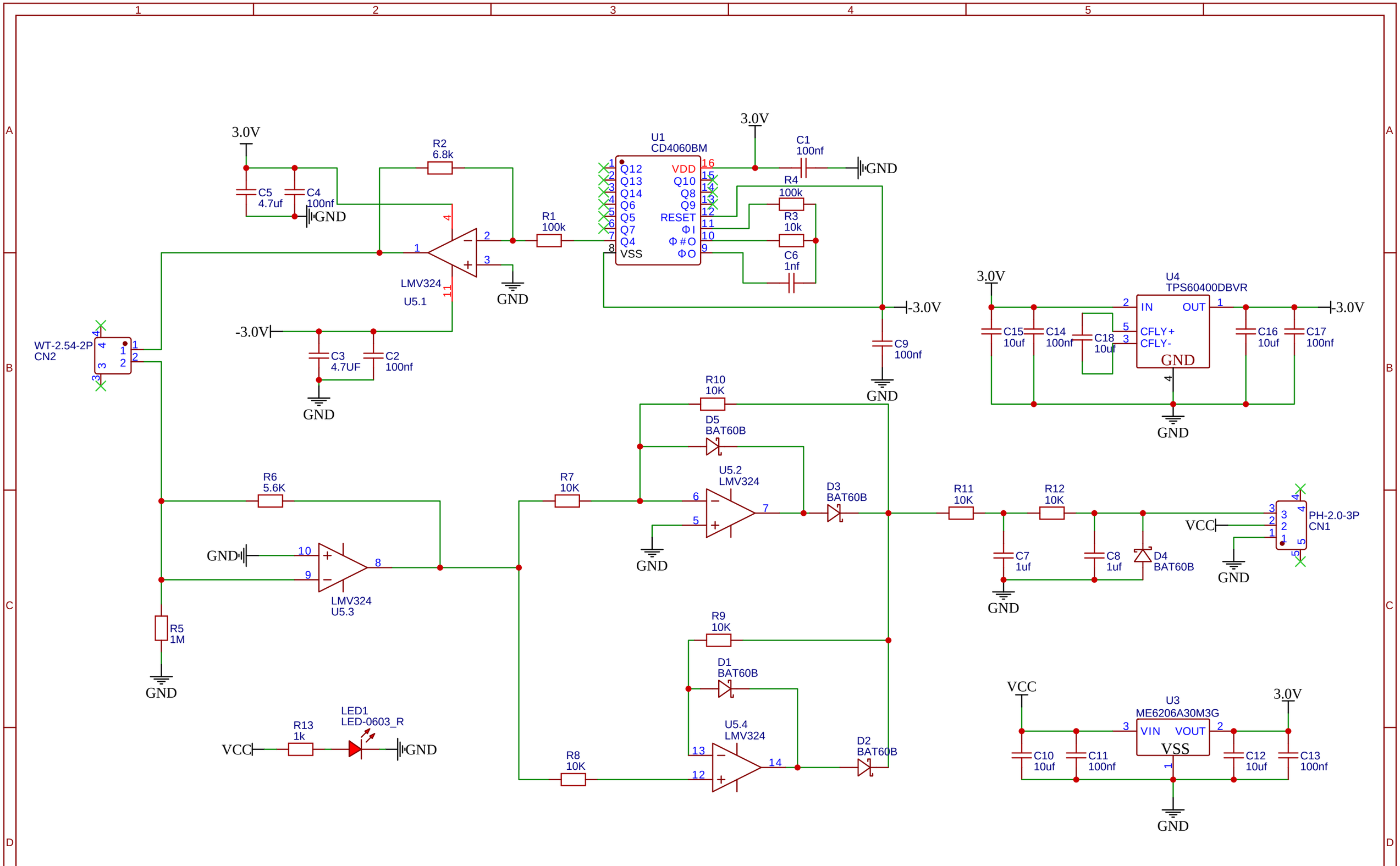

TITLE: Sheet_TDS水质传感器模块 HS-S79-PL		REV: 1.0
	Company:	Sheet: 1/1
	Date: 2025-07-09 Drawn By:	