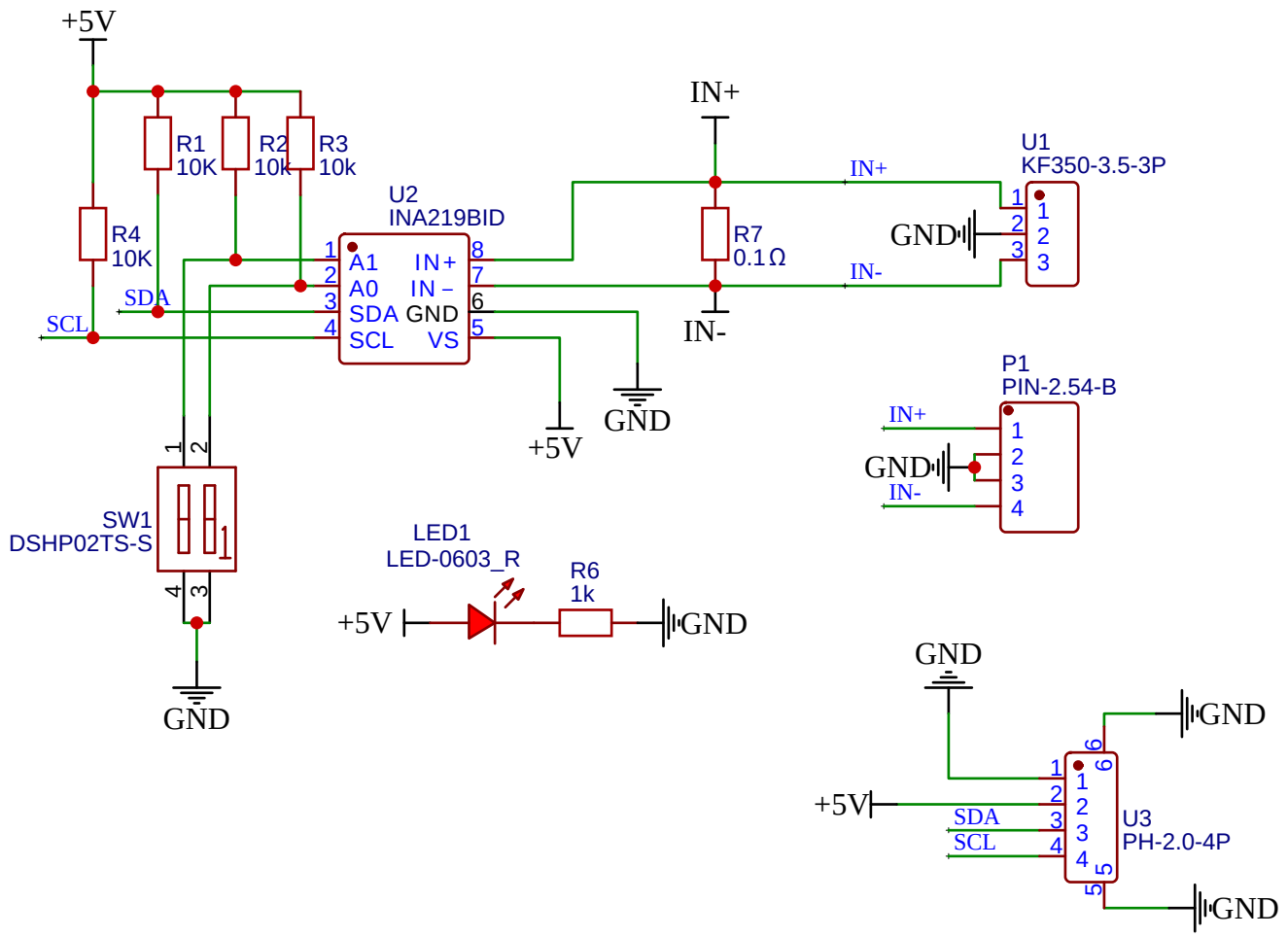

TITLE: Sheet_IIC数字功率计HS-S73P		REV: 1.0
	Company:	Sheet: 1/1
	Date: 2025-06-17 Drawn By:	